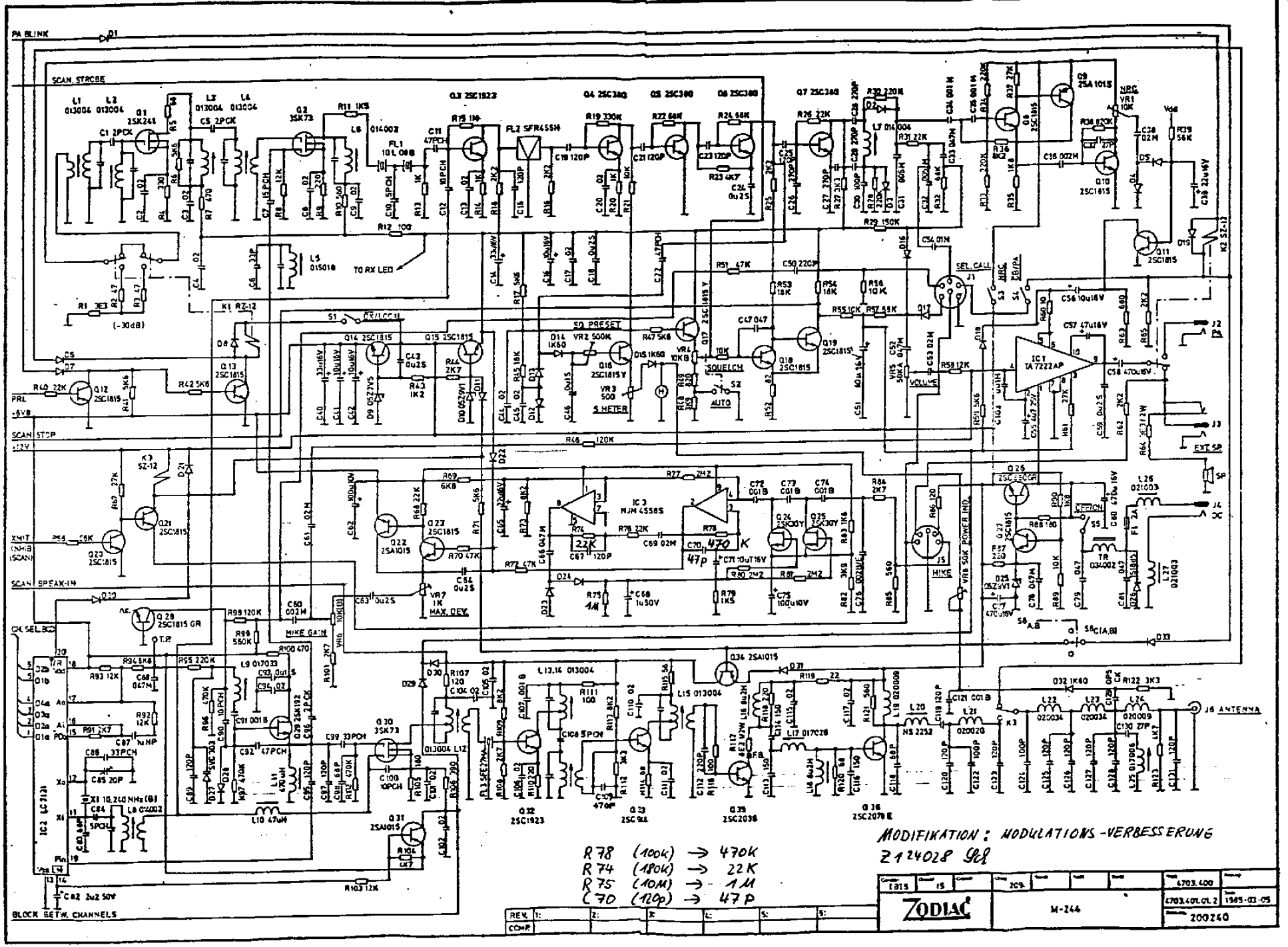
PA BLINK
SCAN STROBE
SCAN STOP
SCAN BREAK-IN
BLOCK BETW. CHANNELS
TO RX LED
SQ PRESET
S METER
SQUELCH
AUTO
VOLUME
SEL. CALL
MIKE
MIKE GAIN
MAX. DEV.
POWER IND.
EXT SP
J6 ANTENNA
IC1 TA7222AP
IC3 NJM4558S
IC2 LC7131
R78 (100k) → 470K
R74 (180k) → 22K
R75 (10M) → 1M
C70 (120p) → 47P
MODIFIKATION: MODULATIONS-VERBESSERUNG
Z124028 Sch
ZODIAC
M-244
200240
4703.400
4703.401.01.2
1985-03-05